272701

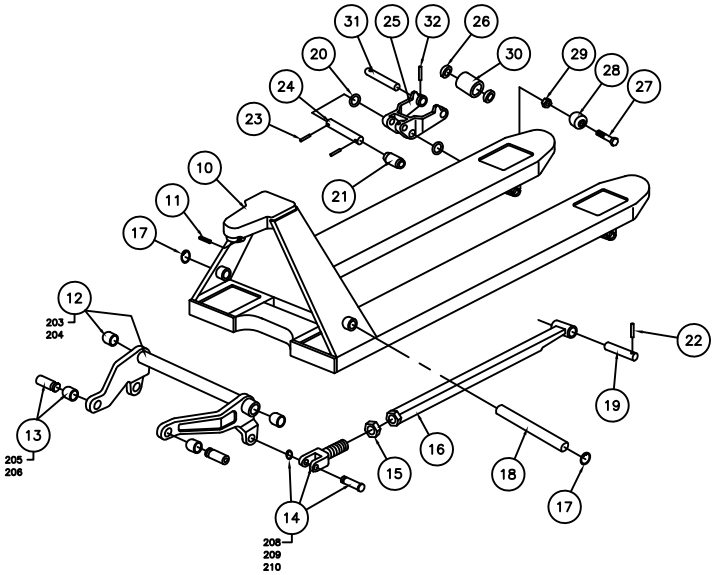

LONG FORK PALLET TRUCK

- Pump, load wheels and steering same as CPI model.
- Overload bypass.
- Rubber coated handle.
- 2 year pump warranty.
- 7" moldon polyurethane steering wheels.
- 3" moldon polyurethane load wheels.
- 70" long forks.

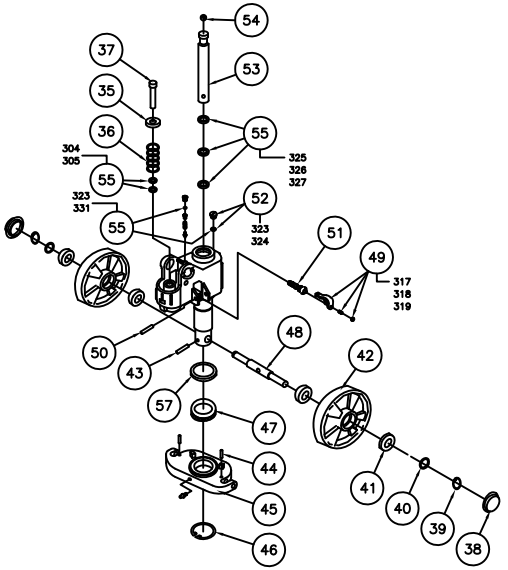

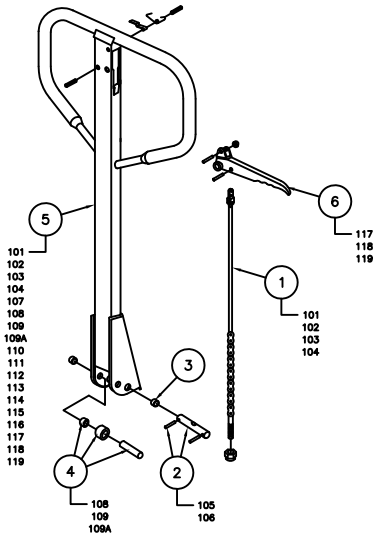

JACK PARTS LIST

35	270032	301	SPRING CAP	1
36	270033	302	SPRING	1
37	270035	303	PUMP PISTON	1
38	272665	306	DUST COVER	2
39	270036	307	SPRING WASHER	2
40	270037	308	WASHER	2
41	272325	309	BEARING	4
42	272663	310	POLY STEERING WHEEL	2
43	270038	311	ELASTIC PIN	1
44	270041	312	ELASTIC PIN	2
45	270043	313	THRUST PLATE	1
46	270044	314	RETAINING RING	1
47	272100	315	THRUST PLATE	1
48	270045	316	SHAFT	1
49	**270050**		**KIT: LEVER PLATE**	**1**
		317	NUT	1
		318	SCREW	1
		319	LEVER PLATE	1
50	270053	320	ELASTIC PIN	1
51	272664	321	VALVE CARTRIDGE	1
52	**270057**		**KIT: SCREW/WASHER**	**1**
		323	SEAL WASHER	1
		324	SCREW PLUG	1
53	270058	328	PISTON ROD	1
54	270059	329	STEEL BALL	1
55	**270061**		**KIT: SEAL**	**1**
		304	DUST RING	1
		305	SEAL	1
		323	SEAL WASHER	1
		325	SEAL	1
		326	O-RING	1
		327	DUST RING	1
		331	O-RING	1
56	**272661**		**REPLACEMENT PUMP**	**1**
57	276011	337	BEARING COVER	1

HANDLE PARTS LIST (Type "A")

1	**270060**		**ASS'Y: HANDLE RELEASE**	**1**
		101	RELEASE ROD	1
		102	CHAIN	1
		103	ADJUSTING BOLT	1
		104	ADJUSTING NUT	1
2	**270004**		**KIT: AXLE/PIN**	**1**
		105	AXLE WITH HOLE	1
		106	ELASTIC PIN	2
3	273008	107	BUSHING	2
4	**270005**		**KIT: PRESSURE ROLLER**	**1**
		108	ROLLER PIN	1
		109	PRESSURE ROLLER	1
		109A	BUSHING	1
5	**270007**		**KIT: HANDLE ASSEMBLY**	**1**
		101	RELEASE ROD	1
		102	CHAIN	1
		103	ADJUSTING BOLT	1
		104	ADJUSTING NUT	1
	273008	107	BUSHING	2
		108	ROLLER PIN	1
		109	PRESSURE ROLLER	1
		109A	BUSHING	1
		110	DRAW BAR	1
		111	STOP RUBBER	1
		112	ELASTIC PIN	1
		113	BLADE SPRING	1
		114	SPRING	1
		115	ELASTIC PIN	1
		116	ELASTIC PIN	1
		117	CONTROL HANDLE	1
		118	ROLLER	1
		119	ELASTIC PIN	1
6	**272791**		**KIT: CONTROL HANDLE**	**1**
		117	CONTROL HANDLE	1
		118	ROLLER	1
		119	ELASTIC PIN	1

FORK FRAME PARTS LIST

10	N/A	201	FORK FRAME	1
11	270008	202	ELASTIC PIN	1
12	**270010**		**KIT: ROCK-ARM/BUSHING**	**1**
		203	ROCK-ARM	1
		204	BUSHING	2
13	**270011**		**KIT: SHAFT/BUSHING**	**1**
		205	SHAFT	2
		206	BUSHING	4
14	**270012**		**KIT: JOINT**	**1**
		208	RETAINING RING	2
		209	JOINT	2
		210	PIN	2
15	272318	211	NUT	2
16	270013	212	PUSHING ROD	2
17	270014	213	RETAINING RING	2
18	270015	214	SHAFT	1
19	270019	216	SHAFT	2
20	270020	217	INTERMEDIATE ROLLER	4
21	270022	218	EXTENDED ROLLER	2
22	270023	219	ELASTIC PIN	2
23	270024	220	ELASTIC PIN	4
24	270026	221	SHAFT	2
25	270027	222	FRAME OF ROLLER	2
26	272325	226	BEARING	4
27	272331	231	BOLT	2
28	272327	232	ENTER ROLLER	2
29	272326	233	LOCK NUT	2
30	272662	234	LOADING ROLLER	2
31	270030	235	SHAFT FOR ROLLER	2
32	270031	236	ELASTIC PIN	2

P/N 272701

Wheel: Polyurethane
Fork: 27" x 70"
Weight: 308 lbs
Capacity: 4,400 lbs

PRINT ISSUED
DEC 1, 2006
WESCO MANUFACTURING ENGINEERING DEPARTMENT

REV | DATE & INIT | REVISIONS

WESCO INDUSTRIAL PRODUCTS INC.
NORTH WALES PENNA. 19454

PART NAME: PALLET TRK: 27X70 LONG FORK
TOLERANCE UNLESS OTHERWISE SPECIFIED
FRACTION ± 1/64 | 3 PLACE DECIMAL ± .005 | 2 PLACE DECIMAL ± .01
ANGULAR ± 1-1/2° | SHEET 1 OF 1
BREAK ALL SHARP EDGES AND REMOVE ALL BURRS
DRAWN: CHECKED: APP. ENGR.
SCALE: 1" = 2"
D- 272701 REV