OFFICE STAR™ PRODUCTS

EC9235-EC3
EXECUTIVE ECO LEATHER VISITOR'S CHAIR
OPERATING INSTRUCTIONS

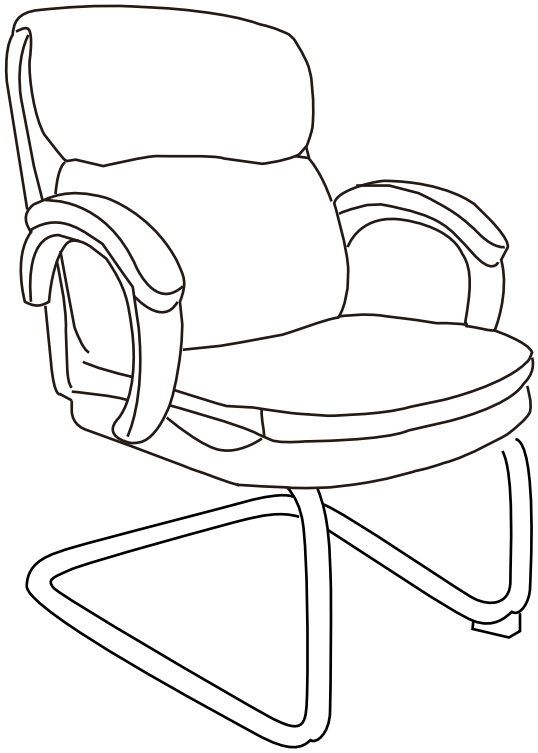

WARNING

1. Use this product only one person at a time.
2. Do not use this chair unless all bolts screws and knobs are securely tightened.
3. Check that all bolts screws and knobs are tight every three months or as needed.
4. Dispose of packing material properly. Do not use plastic cover as head covering. It may cause suffocation.
5. Do not use chair as a stepladder.
6. Use this chair for its intended purpose only.
7. Use mild detergent only for cleaning.

LIMITED WARRANTY

Office Star chairs are warranted from the date of purchase against failure due to material and workmanship as follows:

- 5 Years on all non-moving metal parts.
- 2 Years on component parts including Control mechanisms, pneumatic cylinders, wood, plastic parts, base and casters.
- 1 Year on upholstery fabric and foam against wear and deterioration.
- We cannot warrant leather against routine scratching and scuffing, as all leather is subject to minor blemishes in normal use.

To make a warranty claim, contact Parts Department. Provide model number, proof of purchase, description of the problem and obtain return authorization. At it's option Office Star Products will:

(a) Supply compatible components of current manufacture.
(b) Repair the customer's component. The customer must prepay freight on any components returned to the factory. Return freight on components still in warranty will be paid by Office Star Products.

**All warranties are limited to the original purchaser for normal Residential usage by persons weighing 200 lbs. or less. This warranty will not cover labor, freight or damage from misuse, abuse, negligence, alteration, accident, vandalism, rusting, acts of nature or any other event beyond the control of Office Star Products. The warranty does not cover cosmetic damage that may result from normal use. Liability for incidental or consequential damages is excluded. The user assumes all risk of injury resulting from use of this product.* This warranty gives you specific legal rights, and you may also have other rights which vary from state to state.

Our quality standards are among the highest in the industry. Sometimes, no matter how hard we try, there are times when parts are damaged or missing. Our Parts Department will do everything possible to promptly remedy the problem. Contact us via e-mail **parts@officestar.net,** by Fax 1-909-930-5629, or toll free parts number 1-800-950-7262, Monday through Friday 8:00 a.m. - 5:00 p.m. Pacific Time.

EC9235-EC3

EXECUTIVE ECO LEATHER VISITOR'S CHAIR

ASSEMBLY INSTRUCTIONS

STEP 1

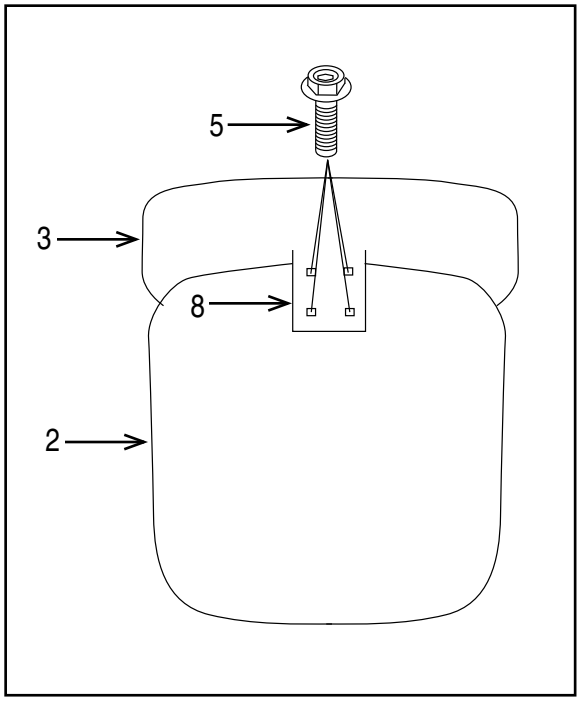

STEP 2

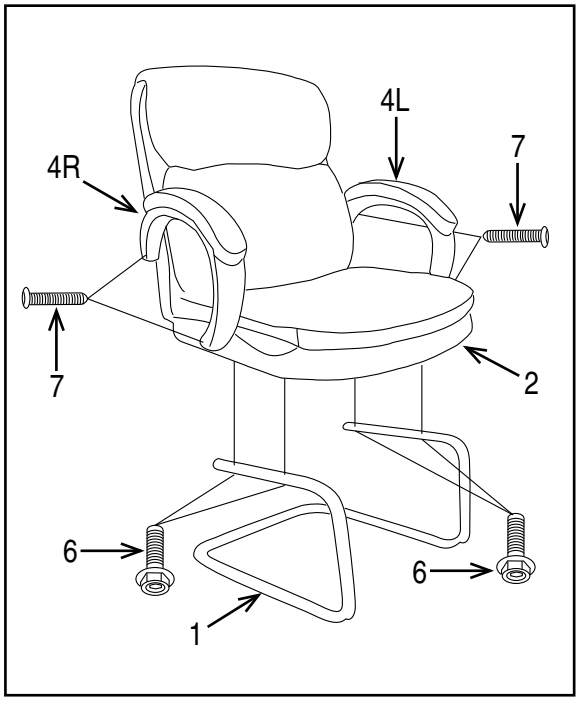

PART	QTY
1. Base	1
2. Seat Cushion	1
3. Back Cushion	1
4. Arms (4R & 4L)	2
5. Back Support Screws	4
6. Base Screws	4
7. Arm Screws	4
8. Back Support (pre-installed)	1
9. Allen Wrench (not shown)	1

Remove all parts from carton, separate by part numbers indicated on parts list, and verify part quantities.
STEP 1 Attach Back Support (8) to Seat Cushion (2) using four Back Support Screws (5). **FULLY TIGHTEN ALL SCREWS USING ALLEN WRENCH (9).**
STEP 2 Attach Base (1) to Seat Cushion (2) using four Base Screws (6). **FULLY TIGHTEN ALL SCREWS USING ALLEN WRENCH (9).** Attach Arms (4L & 4R) to Seat Cushion (2) and Back Cushion (3) using two Arm Screws (7) for each Arm (4). **FULLY TIGHTEN ALL SCREWS USING ALLEN WRENCH (9).**
ATTENTION: MAKE SURE ALL SCREWS ARE FULLY TIGHTENED BEFORE USING CHAIR.

© Office Star Products May 2011