SPACE® SEATING

33-Y22P91A8
MANAGER'S CHAIR
ASSEMBLY INSTRUCTIONS

STEP 1

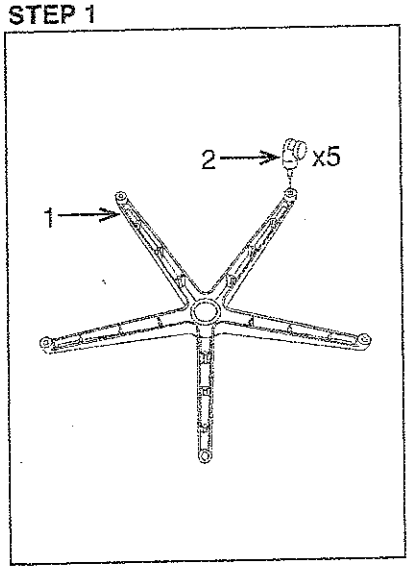

STEP 2

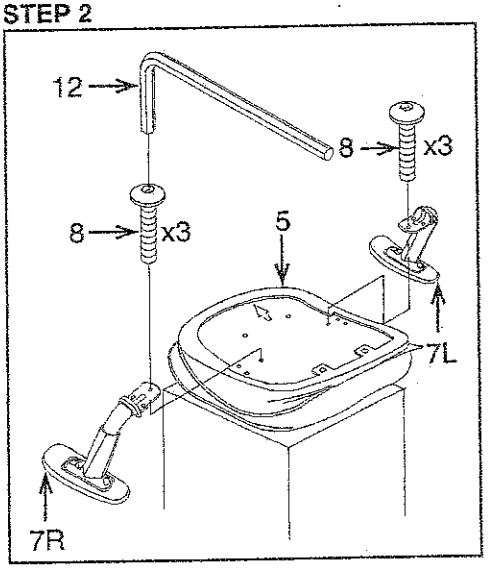

STEP 3

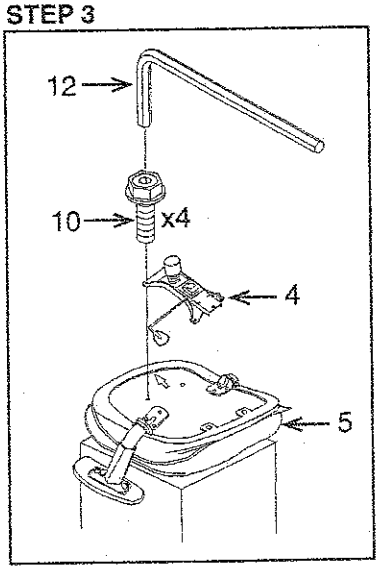

STEP 4

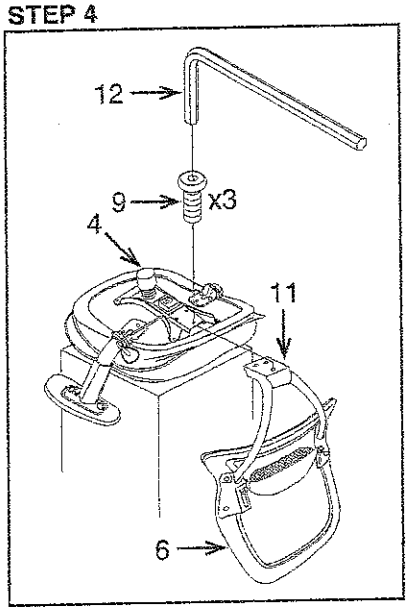

STEP 5

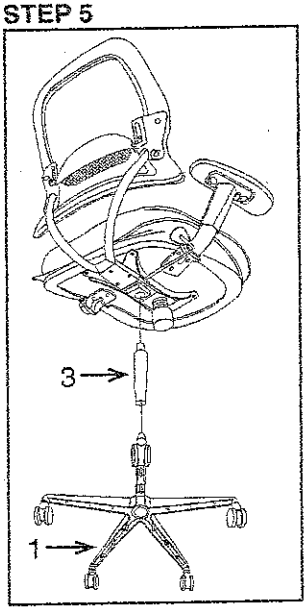

PART	QTY
1. Base	1
2. Casters	5
3. Pneumatic Cylinder	1
4. Seat Plate	1
5. Seat Cushion	1
6. Back Assembly	1
7. Arms (7L & 7R)	2
8. Arm Screws	6
9. Back Support Screws	3
10. Seat Plate Screws	4
11. Back Support (pre-installed)	1
12. Allen Wrench	1

Remove all parts from carton, separate by part numbers indicated on parts list, and verify part quantities.

STEP 1 Insert five Casters (2) into Base (1), push hard until you feel or hear the Caster (2) snap into place.

STEP 2 Align holes of Arms (7L & 7R) with holes of Seat Cushion (5), secure Arms (7L & 7R) using three Arm Screws (8) for each Arm,
FULLY TIGHTEN ALL ARM SCREWS (8) USING ALLEN WRENCH (12).

STEP 3 Attach Seat Plate (4) to Seat Cushion (5) with the arrow towards the front of the chair, using four Seat Plate Screws (10),
FULLY TIGHTEN ALL SEAT PLATE SCREWS (10) USING ALLEN WRENCH (12).

STEP 4 Attach Back Support (11) to rear of Seat Plate (4) using three Back Support Screws (9).
FULLY TIGHTEN ALL BACK SUPPORT SCREWS (9) USING ALLEN WRENCH (12).

STEP 5 Insert Pneumatic Cylinder (3) into Base (1), place the assembled seat on top of Pneumatic Cylinder (3) and apply downward pressure.

ATTENTION: MAKE SURE ALL SCREWS ARE FULLY TIGHTENED BEFORE USING CHAIR.

SPACE®
SEATING

33-Y22P91A8
MANAGER'S CHAIR
OPERATING INSTRUCTIONS

FEATURES

• **PNEUMATIC SEAT HEIGHT ADJUSTMENT**
To raise seat remove pressure from seat and lift lever (1). To lower seat height sit on chair and lift lever (1).
NOTE: It is normal for chair to slightly lower under body weight.

• **2-TO-1 SYNCHRO TILT ADJUSTMENT**
For individual comfort, this chair has been equipped with an adjustment that will allow the user to change the tension of the tilting feature. Turn knob (2) clockwise to increase tension and counter-clockwise to decrease or ease the tension. To lock return chair to the upright position, push lever (1) in. To unlock pull lever (1) out.
NOTE: Be careful not to loosen back tilt adjustment knob completely.

• **ARM HEIGHT ADJUSTMENT**
To adjust arm height, push button (3) in to allow the arms to move up or down freely. Release button (3) once the desired height is reached.

WARNING

1. Use this product only one person at a time.
2. Do not use this chair unless all bolts screws and knobs are securely tightened.
3. Check that all bolts screws and knobs are tight every three months or as needed.
4. Dispose of packing material properly. Do not use plastic cover as head covering. It may cause suffocation.
5. Do not use chair as a stepladder.
6. Use this chair for its intended purpose only.
7. Use mild detergent only for cleaning.

LIMITED WARRANTY

SPACE® chairs are warranted from the date of purchase against failure due to material and workmanship as follows:*

- Lifetime on component parts including pneumatic cylinder, control mechanism, base and casters.
- 3 Years on upholstery fabric and foam against wear and deterioration.
- Leather is not warranted against routine scratching and scuffing, as leather is subject to minor blemishes in use.

**All warranties are limited to the original purchaser for normal commercial usage defined as a standard forty hour work week by persons weighing 250 lbs. or less. This warranty will not cover labor, freight or damage from misuse, abuse, negligence, alteration, accident, vandalism, rusting, acts of nature or any other event beyond the control of Office Star Products. The warranty does not cover cosmetic damage that may result from normal use. Liability for incidental or consequential damages is excluded. The user assumes all risk of injury resulting from use of this product. When usage is more than 40 hours per week, a five year warranty on all parts applies. Fabric is warranted for one year.* This warranty gives you specific legal rights, and you may also have other rights which vary from state to state.

To make a warranty claim, contact Parts Department via e-mail **parts@officestar.net**, by Fax 1-909-930-5629, or toll free parts number 1-800-950-7262, Monday through Friday 8:00 a.m. - 5:00 p.m. Pacific Time. Provide model number and description of the problem and obtain confirmation number. At it's option Office Star Products will:
(a) Supply compatible components of current manufacture.
(b) Repair the customer's component.

It is the customer's responsibility to prepay freight on any components returned to the factory. Return freight on components covered by warranty will be paid by Office Star Products.

OFFICE STAR® PRODUCTS