WORK SMART

33320 / 33340
DUAL FUNCTION TASK CHAIR
OPERATING INSTRUCTIONS

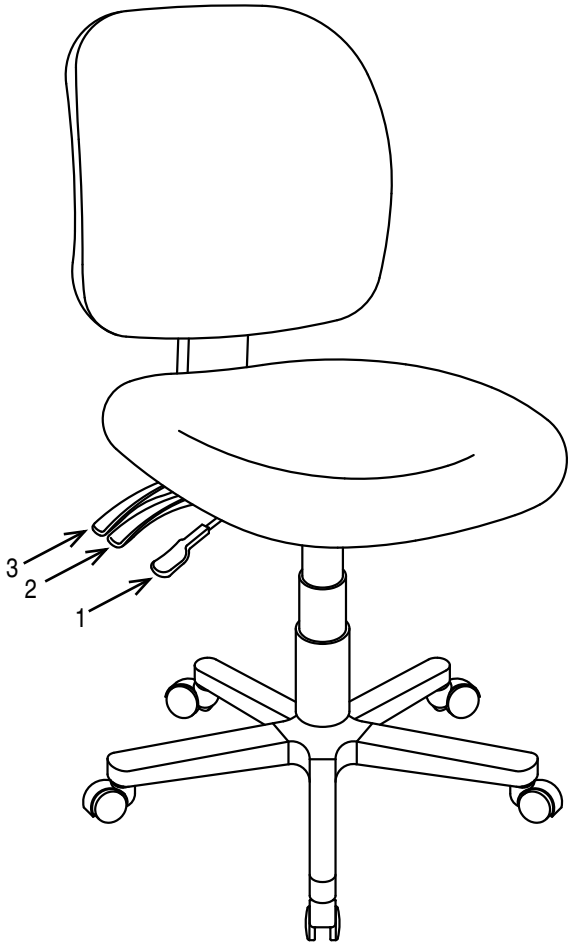

FEATURES

- **PNEUMATIC SEAT HEIGHT ADJUSTMENT**
  To raise seat remove pressure from seat and pull lever (1) up. To lower seat height sit on chair and pull lever (1) up.
- **SEAT ANGLE ADJUSTMENT**
  To adjust seat angle, lift lever (2). Leave lever up for free float or push lever (2) down to lock.
- **BACKREST ANGLE ADJUSTMENT**
  To adjust back angle lift lever (3). Leave lever (3) up for free float or push lever (3) down to lock at any angle.

WARNING

1. Use this product only one person at a time.
2. Do not use this chair unless all bolts screws and knobs are securely tightened.
3. Check that all bolts screws and knobs are tight every three months or as needed.
4. Dispose of packing material properly. Do not use plastic cover as head covering. It may cause suffocation.
5. Do not use chair as a stepladder.
6. Use this chair for its intended purpose only.
7. Use mild detergent only for cleaning.

LIMITED WARRANTY

Work Smart chairs are warranted from the date of purchase against failure due to material and workmanship as follows:
- 15 Years on all non-moving metal parts.
- 5 Years on component parts including Control mechanisms, pneumatic cylinders, wood, plastic parts, base and casters.
- 3 Years on upholstery fabric and foam against wear and deterioration.

To make a warranty claim, contact Parts Department. Provide model number, proof of purchase, description of the problem and obtain return authorization. At it's option Office Star Products will:

(a) Supply compatible components of current manufacture.

(b) Repair the customer's component. The customer must prepay freight on any components returned to the factory. Return freight on components still in warranty will be paid by Office Star Products.

**All warranties are limited to the original purchaser for normal commercial usage defined as a standard forty hour work week by persons weighing 250 lbs. or less. This warranty will not cover labor, freight or damage from misuse, abuse, negligence, alteration, accident, vandalism, rusting, acts of nature or any other event beyond the control of Office Star Products. The warranty does not cover cosmetic damage that may result from normal use. Liability for incidental or consequential damages is excluded. The user assumes all risk of injury resulting from use of this product. When usage is more than 40 hours per week, a two year warranty on all parts applies. Fabric and foam is warranted for one year.* This warranty gives you specific legal rights, and you may also have other rights which vary from state to state.

Our quality standards are among the highest in the industry. Sometimes, no matter how hard we try, there are times when parts are damaged or missing. Our Parts Department will do everything possible to promptly remedy the problem. Contact us via e-mail **parts@officestar.net,** by Fax 1-909-930-5629, or toll free parts number 1-800-950-7262, Monday through Friday 8:00 a.m. - 5:00 p.m. Pacific Time.

OFFICE STAR ™ PRODUCTS

33320 / 33340
DUAL FUNCTION TASK CHAIR
ASSEMBLY INSTRUCTIONS

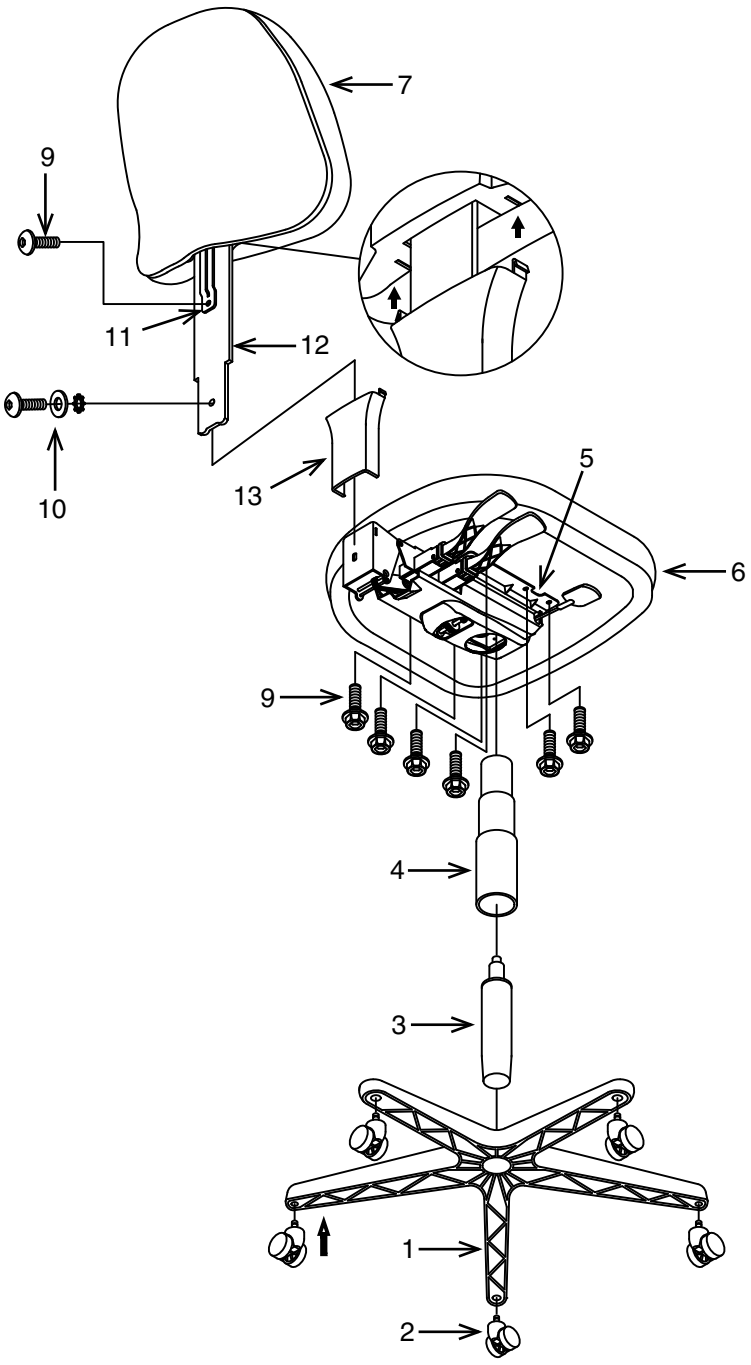

PART	QTY
1. Base	1
2. Caster	5
3. Pneumatic Cylinder	1
4. Bellows	1
5. Mechanism	1
6. Seat Cushion	1
7. Back Cushion	1
8. Mechanism Screws	6
9. Backrest Bolt	1
10. Backrest Bolt w/ Washers	1
11. Backrest Post	1
12. Back Support	1
13. Back Support Cover	1
14. Allen Wrench (not shown)	2

Remove all parts from carton, separate by part numbers indicated on parts list, and verify part quantities.

STEP 1 Insert five Casters (2) into Base (1), push hard until you feel or hear the Caster (2) snap into place. Insert Pneumatic Cylinder (3) into Base (1) and slip Bellows (4) over Pneumatic Cylinder (3).

STEP 2 Attach Mechanism (5) to Seat Cushion (6) with the arrow towards the front of the chair using six Mechanism Screws (8). **FULLY TIGHTEN ALL SCREWS USING ALLEN WRENCH (14).**

STEP 3 Attach Backrest Post (11) to Back Support (12) using Backrest Bolt (9). **FULLY TIGHTEN BACKREST BOLT (9) USING ALLEN WRENCH (14).** Secure Back Support (12) to rear of Mechanism (5) using Backrest Bolt w/ Washers (10). **FULLY TIGHTEN BACKREST BOLT w/ WASHERS (10) USING ALLEN WRENCH (14).** Cover Back Support (12) using Back Support Cover (13).

STEP 4 Place the assembled seat on top of Pneumatic Cylinder 3) and apply downward pressure.

ATTENTION: MAKE SURE ALL SCREWS ARE FULLY TIGHTENED BEFORE USING CHAIR.

© Office Star Products June 2011