FT 5241

ASSEMBLY INSTRUCTION

REMOVE ALL ITEMS FROM THE CARTON .VERIFY ALL PIECES BEFORE ASSEMBLY.

PARTS LIST

KEY	QTY	DESCRIPTION	KEY	QTY	DESCRIPTION	KEY	QTY	DESCRIPTION
1	5	CASTER	6	1	SEAT CUSHION	11	1	BACK CUSHION
2	1	BASE	7	5	SCREWS 1/4"X3/4" (RED)	12	1	ALLEN WRENCH
3	1	SEAT POST	8	15	WASHER			
4	1	SEAT POST COVER	9	1SET	ARM			
5	1	MECHANISM	10	11	SCREWS 1/4"X1"(BLUE)			

STEP 1.

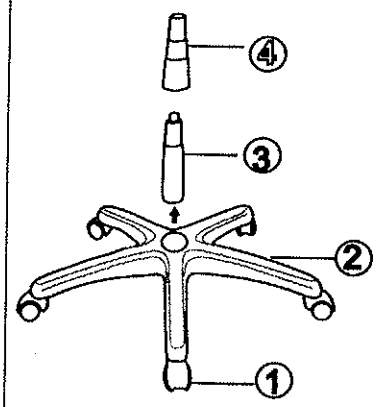

STEP 2.

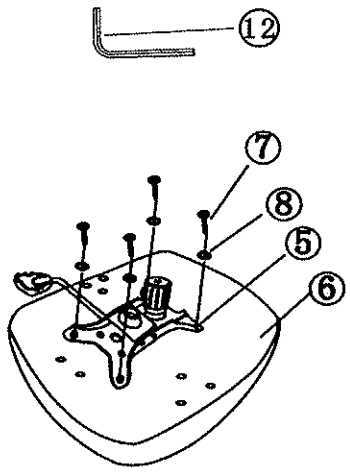

STEP 3.

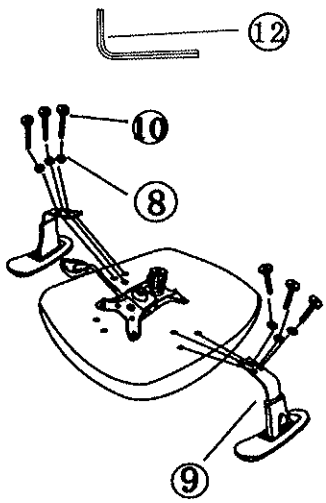

STEP 4.

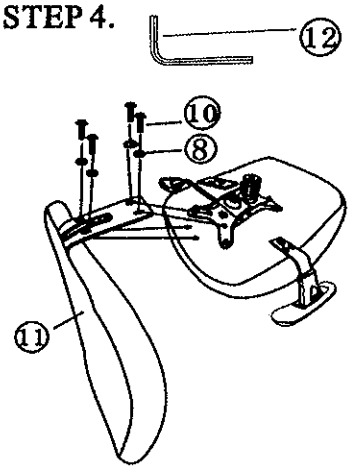

BACKREST BRACKET SHOULD BE ATTACHED ON TOP OF THE MECHANISM

STEP 5.

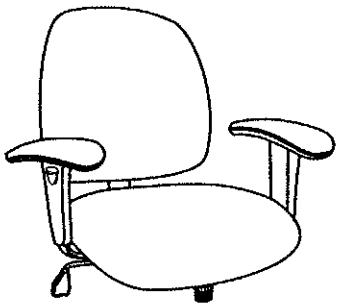

STEP 6.

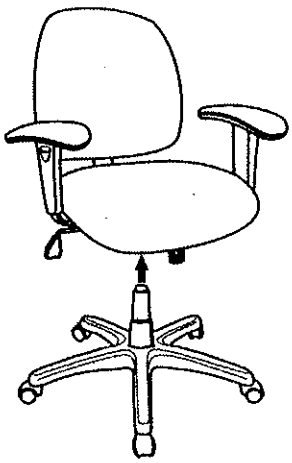

PREVENTIVE MAINTENANCE AND WARNING

- USE THIS PRODUCT ONLY FOR SEATING ONE PERSON AT A TIME.
- DO NOT USE CHAIR AS STEP STOOL/LADDER.
  DO NOT USE CHAIR UNLESS ALL BOLTS,SCREWS ARE TIGHT.AT LEAST EVERY SIX MONTHS, CHECK ALL BOLTS,SCREWS TO BE SURE THEY ARE TIGHT.
- IF ANY PARTS ARE MISSING,BROKEN,DAMAGED OR WORN,STOP USE OF THE PRODUCT UNTIL REPAIRS ARE MADE USING FACTORY AUTHORIZED PARTS.
- FAILURE TO FOLLOW THESE WARNINGS CAN RESULT IN SERIOUS INJURY.